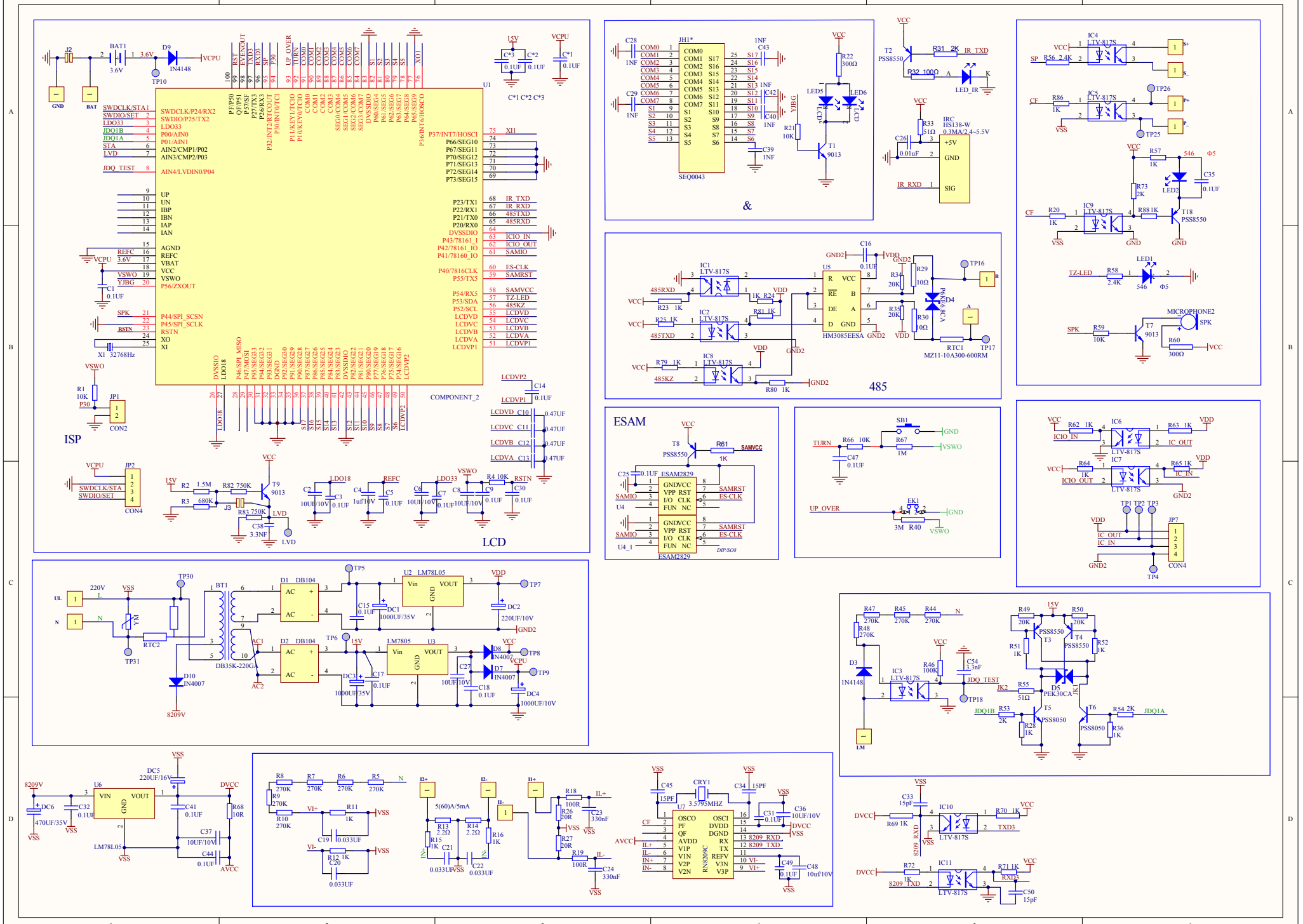
ISP
LCD
&
485
ESAM
COMPONENT_2
SEQ0043
HM3085EESA
MZ11-10A300-600RM
DB35K-220G
LM78L05
LM7805
RN8209C
LTV-817S
PSS8550
PSS8050
PEK30CA
IR_TXD
IR_RXD
LED_IR
SWDCLK/STA
SWDIO/SET
JDQ_TEST
JDQ1A
JDQ1B
SAMVCC
SAMRST
ES-CLK
SAMIO
TZ-LED
MICROPHONE2
SPK
IC_OUT
IC_IN
ICIO_IN
ICIO_OUT
UP_OVER
TURN
VCPU
VSWO
VCC
VDD
VSS
DVCC
AVCC
GND
GND2
8209V
220V
RTC2
DC1
DC2
DC4
DC5
CRY1
3.5795MHZ
8209_RXD
8209_TXD
RXD3
TXD3
CON2
CON4
JP1
JP2
JP7
J2
J3
X1 32768Hz
TP10
TP17
TP18
TP25
TP26
TP30
TP31
TP4
TP7
TP8
TP9